EXPLODED VIEW AND PART LIST

THE PART LIST OF CABINET ASSEMBLY

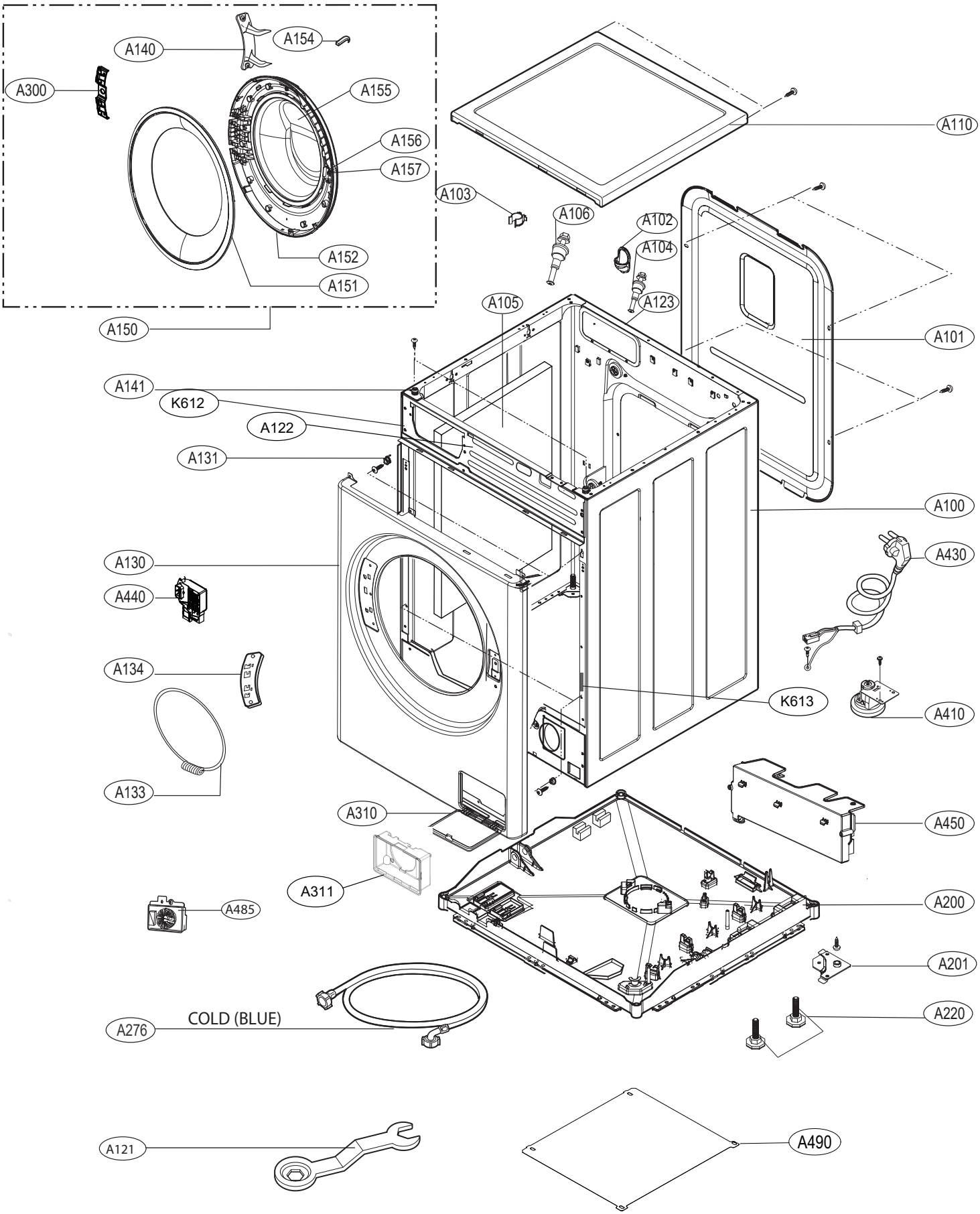

THE EXPLODED VIEW OF CONTROLANEL & DISPENSER ASSEMBLY

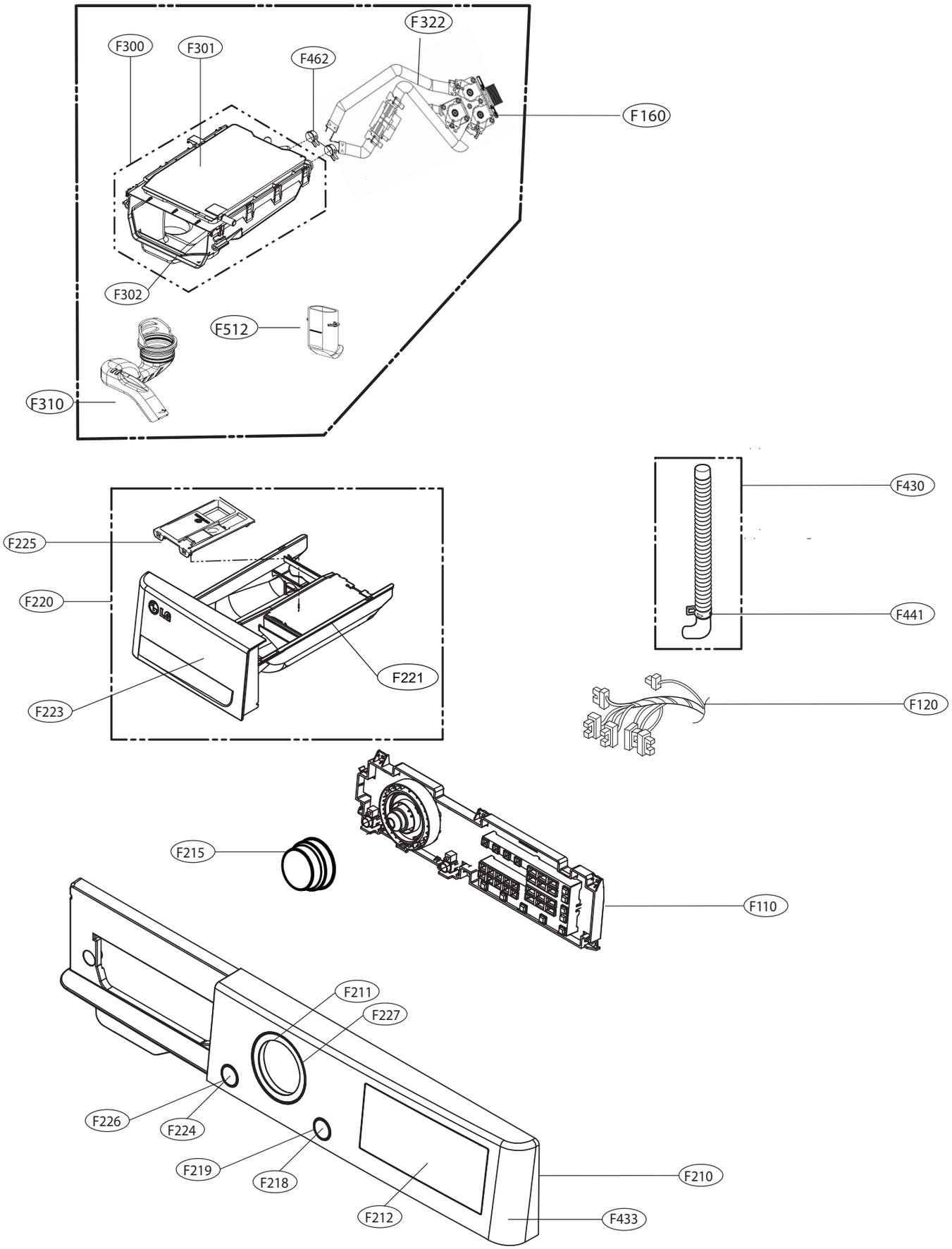
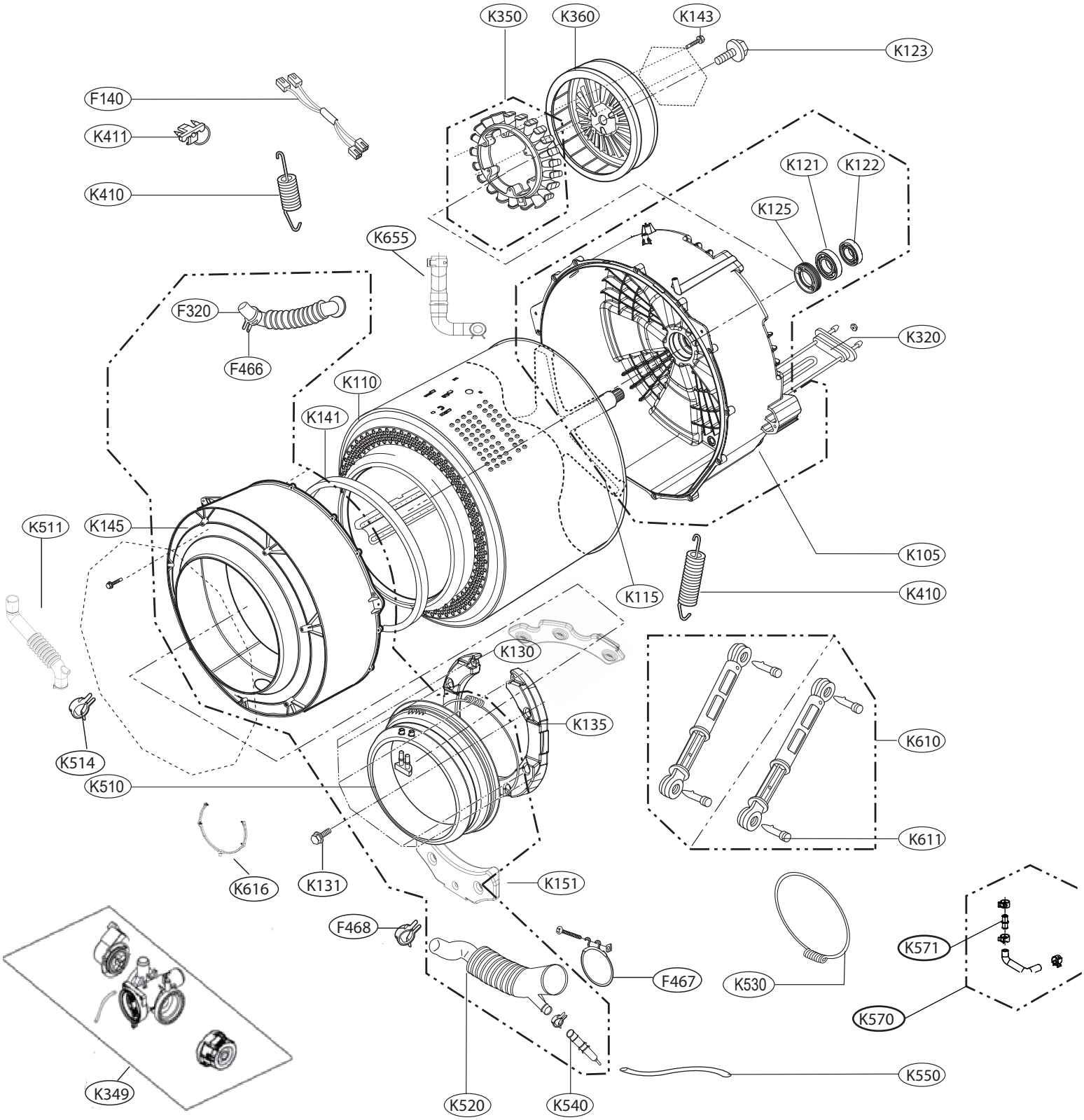
THE EXPLODED VIEW OF DRUM & TUB ASSEMBLY